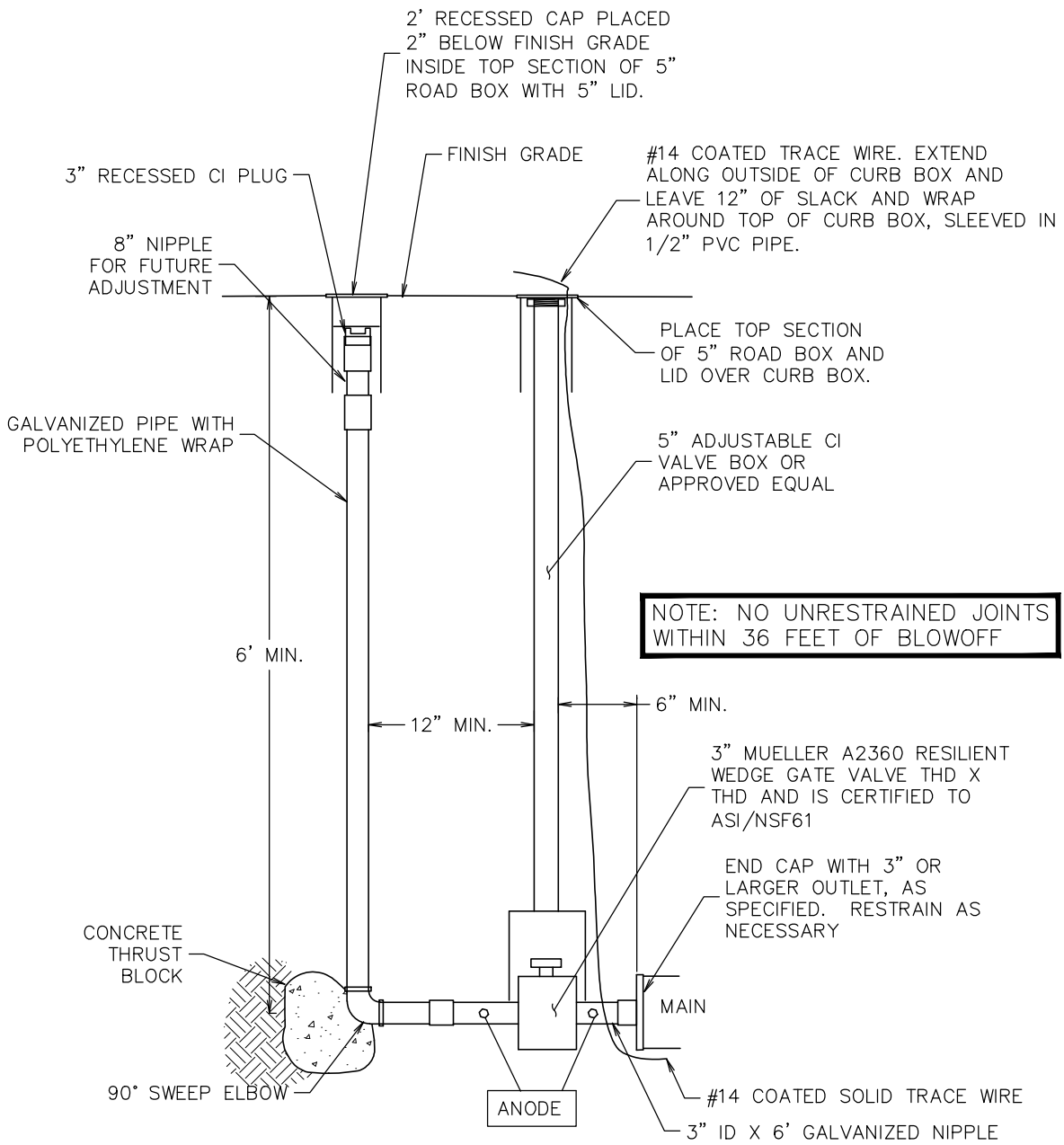

Missoula Engineering Division	Typical Blow-Off Assembly		
	Approved By Utilities Engineer Logan McInnis, PE	Adopted: 09/28/2020 Revised: 02/04/2021	STD - 409