CLARK FORK RIVER
RESTORATION AND ACCESS - BEARTRACKS BRIDGE

CITY OF MISSOULA PARKS & RECREATION DEPARTMENT
MISSOULA, MONTANA
MAY 2024
RESPEC PROJECT NO. W0020.21001

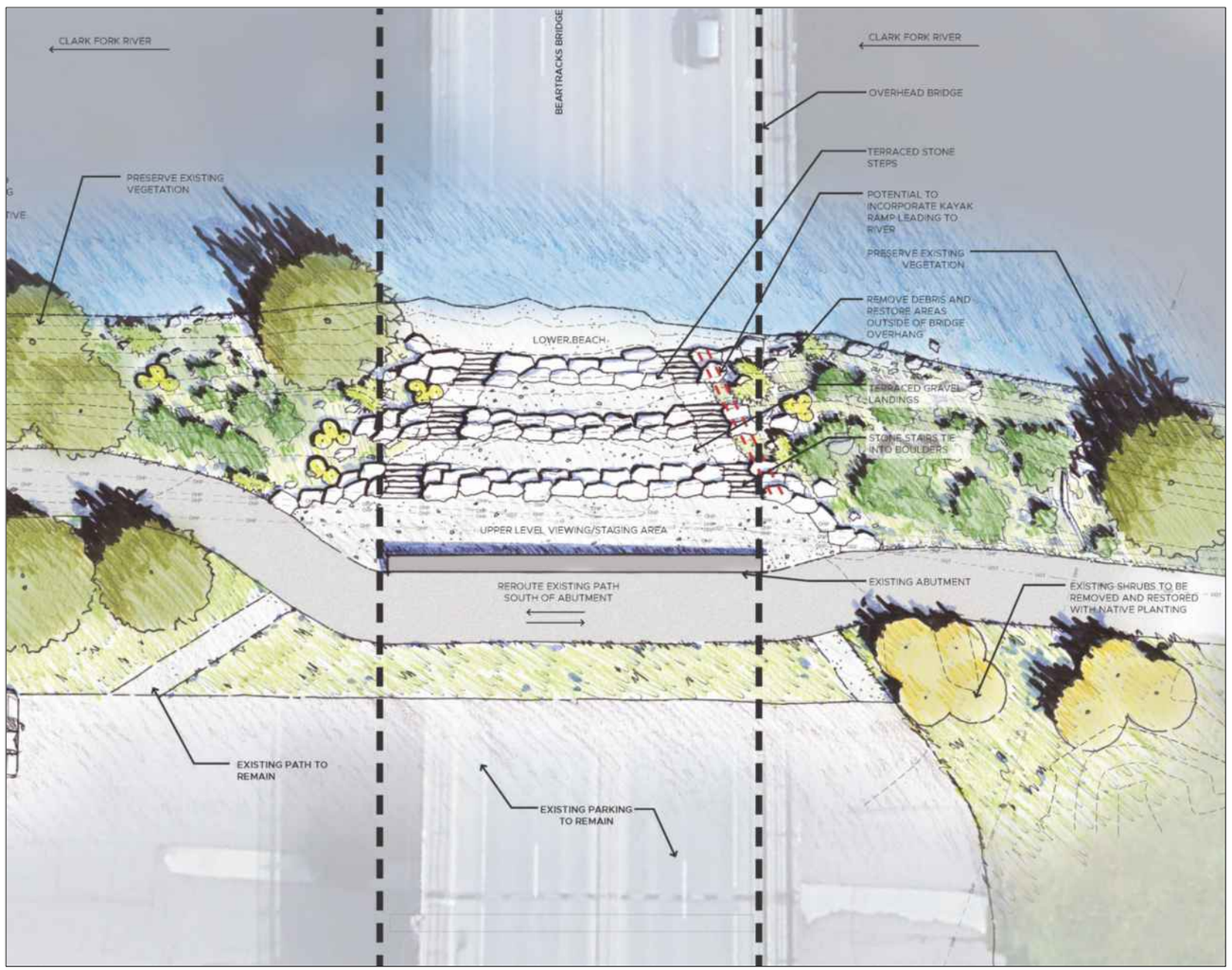

PROJECT CONCEPTUAL RENDERING
N.T.S.

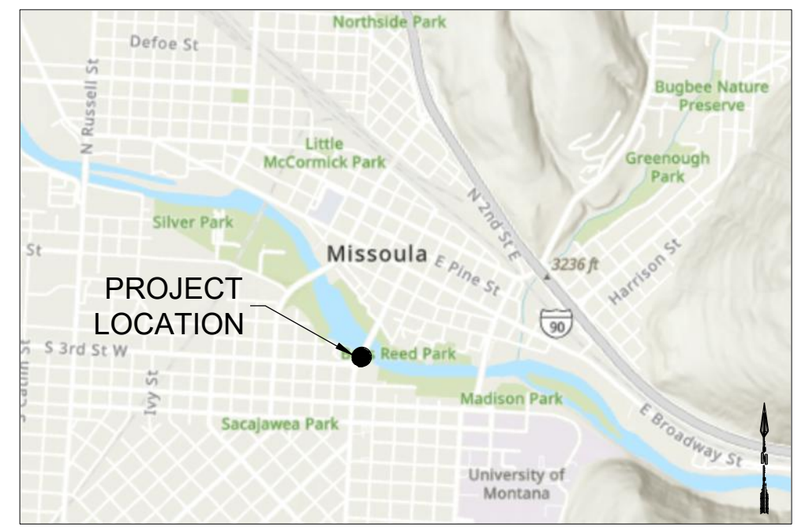

PROJECT VICINITY MAP
N.T.S.

MICHAEL ANTHONY ROTAR
REGISTERED PROFESSIONAL ENGINEER
STATE OF MONTANA NO. PEL-PE-LIC-13285

DATE

DESIGNED SRK
DRAWN SRK
CHECKED MAR
DATE 05/2024

REVISION

RESPEC
WATER & NATURAL RESOURCES
3810 VALLEY COMMERCE DR SUITE 4
BOZEMAN, MT 59718
WWW.RESPEC.COM PHONE (406)284-2525

STAMP
90% REVIEW
PRELIMINARY
NOT FOR CONSTRUCTION
5/2024

811 Know what's below. Call before you dig.

CITY OF MISSOULA
PARKS AND RECREATION
DEPARTMENT
600 CREGG LANE
MISSOULA, MT 59801

CLARK FORK RIVER
RESTORATION AND
ACCESS -
BEARTRACKS BRIDGE

COVER

SHEET NUMBER:
G-01
SHEET

NAME: N:\PROJECTS\W0020.21001 - CFR RESTORATION & ACCESS\CAD\SHEETS\ACCESS DESIGN\BEARTRACKS SHEET SET\CFR R&A_BEARTRACKS_S_GENERAL.DWG
PLOT DATE: May 15, 2024 10:03 AM, BY: SANDRA (SANDY) KOHL

SHEET INDEX TABLE

SHEET NUMBER	SHEET TITLE
GENERAL	
G-01	COVER
G-02	SHEET INDEX AND CONSTRUCTION QUANTITIES
G-03	GENERAL NOTES ABBREVIATIONS AND LEGEND
CIVIL	
EX-01	EXISTING CONDITIONS & REMOVALS
C-01	SITE PLAN
C-02	GRADING PLAN
C-03	ACCESS PLAN & PROFILE
C-04	ACCESS PLAN & PROFILE
C-05	TRAIL REALIGNMENT PLAN & PROFILE
DETAILS	
D-01	DETAILS
D-02	DETAILS
D-03	DETAILS

BEARTRACKS BRIDGE RIVER ACCESS - CONSTRUCTION QUANTITIES	QUANTITY	UNIT
SITE WORK AND GRADING		
CLEARING AND GRUBBING	1	LS
EROSION CONTROL	1	LS
FG-EG CUT (CY)	43	CY
FG-EG FILL (CY)	91	CY
TOPSOIL	23	CY
SEEDING AREA	1230	SF
RIPRAP (MDT CLASS III)	231	CY
VEGETATED RIPRAP (MDT CLASS III)	69	CY
WILLOW PLANTINGS	166	EA
WOODEN FENCE	177	LF
TRAILS AND LANDINGS		
GEOTEXTILE SEPARATION FABRIC	1995	SF
AGGREGATE BASE COURSE GRAVEL (MIX 1" MINUS)	56	CY
AGGREGATE BASE COURSE GRAVEL (3/4" MINUS)	42	CY
BEDDING GRAVEL (3/4" MINUS)	6	CY
STRUCTURAL FILL	31	CY
SURFACE COURSE GRAVEL (ROAD MIX, 3/8" MINUS)	36	CY
ASPHALT	17	CY
WEST AND EAST ROCK STAIR ACCESS		
FLAT STONE 3'- 4' X 4' X 1' (L X W X H)	16	EA
STAIR STRINGER BOULDERS 2.0' - 2.5' DIAMETER	32	EA
TERRACE BOULDERS	58	EA
KEYSTONE BOULDERS 2.5' X 4' X 2.5' (L X W X H)	4	EA
GROUT (STAIRS, BOULDER STRINGERS)	1	CY
REMOVALS		
ASPHALT	18	CY

DESIGNED SRK
DRAWN SRK
CHECKED MAR
DATE 05/2024

REVISION

RESPEC
WATER & NATURAL RESOURCES
3810 VALLEY COMMONS DR SUITE 4
BOZEMAN, MT 59718
WWW.RESPEC.COM PHONE (406)284-2525

STAMP
90% REVIEW
PRELIMINARY
NOT FOR CONSTRUCTION
5/2024

811
Know what's below. Call before you dig.

CITY OF MISSOULA
PARKS AND RECREATION
DEPARTMENT
600 CREGG LANE
MISSOULA, MT 59801

CLARK FORK RIVER
RESTORATION AND
ACCESS -
BEARTRACKS BRIDGE

SHEET INDEX AND
CONSTRUCTION
QUANTITIES

SHEET NUMBER:
G-02
SHEET

NAME: N:\PROJECTS\W0020.21001 - CFR RESTORATION & ACCESS\CAD\SHEETS\ACCESS DESIGN\BEARTRACKS SHEET SET\CFR R&A_BEARTRACKS_S_GENERAL.DWG
PLOT DATE: May 15, 2024 10:03 AM, BY: SANDRA (SANDY) KOHL

GENERAL NOTES:

1. CONTRACTOR SHALL NOTIFY ALL UTILITY COMPANIES AND DETERMINE LOCATION OF ALL UNDERGROUND UTILITIES BEFORE COMMENCING WORK. **CALL 811** (OR ONE CALL UTILITY LOCATE: 1-800-424-5555) A MINIMUM OF 72-HOURS BEFORE WORK IS PLANNED. CONTRACTOR IS RESPONSIBLE FOR PROTECTING AND PROPERLY REPAIRING ANY AND ALL DAMAGED UTILITIES.
2. ANY UTILITY LOCATIONS SHOWN ON THE DRAWINGS ARE APPROXIMATE. ALL UTILITY LOCATIONS ARE SUBJECT TO THE ACCURACY OF THE LOCATION METHOD AND SUBJECT TO RELOCATION FROM THE TIME THAT THESE DRAWINGS WERE PREPARED.
3. THE CONTRACTOR SHALL HAVE ONE (1) SIGNED COPY OF THE APPROVED PLANS AND A COPY OF ANY PERMITS AND EXTENSION AGREEMENTS NEEDED FOR THE JOB, ON-SITE AT ALL TIMES.
4. THE CONTRACTOR IS RESPONSIBLE FOR THE SAFETY OF ALL PERSONNEL, ALL SITE VISITORS, AND THE GENERAL PUBLIC WHO MAY BE AFFECTED BY THE CONSTRUCTION. THIS INCLUDES BUT IS NOT LIMITED TO GENERAL AND CHANNEL EXCAVATION, SHORING, TRAFFIC CONTROL, AND SECURITY. SHOULD CONSTRUCTION ACTIVITIES NECESSITATE TEMPORARY FULL OR PARTIAL CLOSURE OF ROADWAYS, THE CONTRACTOR SHALL BE RESPONSIBLE FOR COORDINATING AND MANAGING THE CLOSURE.
5. CONTRACTOR SHALL IMMEDIATELY NOTIFY THE ENGINEER OF ANY CONFLICTS FOUND BETWEEN THE CONSTRUCTION PLANS AND CONDITIONS ENCOUNTERED IN THE FIELD.
6. CONTRACTOR SHALL, UNLESS OTHERWISE DIRECTED, REPLACE ALL SIGNS, FENCES, CABLES, APPROACH DELINEATORS, OR OTHER FEATURES THAT MAY BE REMOVED TO ACCESS THE CONSTRUCTION AREA. CONTRACTOR SHALL VERIFY THE NATURE AND EXTENT OF ANY OF THESE FEATURES PRIOR TO BIDDING THE WORK. COST OF THIS WORK SHALL BE INCIDENTAL TO THE PROJECT UNLESS OTHERWISE STATED IN THE CONTRACT DOCUMENTS.
7. CONTRACTOR SHALL COMPLY WITH ALL CONDITIONS AND RESTRICTIONS FOUND IN REGULATORY PERMITS OBTAINED BY THE ENGINEER.
8. LEGAL LOAD LIMIT REQUIREMENTS SHALL BE ADHERED TO ON ALL STATE HIGHWAYS, COUNTY ROADS, AND CITY STREETS.
9. THE CONTRACTOR IS TO PROVIDE THEIR OWN WATER FOR COMPACTION AND DUST ABATEMENT.
10. CONSTRUCTION SHALL COMPLY WITH THESE PLANS IN ADDITION TO THE CONTRACT DOCUMENTS AND SPECIFICATIONS.
11. ALL EQUIPMENT USED ONSITE WILL BE CLEAN AND WASHED PRIOR TO ARRIVAL TO THE PROJECT AREAS. ALL IMPORTED MATERIAL MUST BE CERTIFIED AS WEED FREE.
12. EMERGENCY SPILL KITS WILL BE MAINTAINED ON EACH PIECE OF EQUIPMENT, OR IN AN AREA THAT CAN RAPIDLY BE REACHED.
13. ALL WORK IN OR ADJACENT TO THE RIVER WILL BE DONE DURING LOW FLOWS.
14. STRUCTURAL BMPS, SUCH AS SILT FENCE, STRAW BALES OR WATTLES SHALL BE USED TO ISOLATE CONSTRUCTION ALONG THE ACTIVE CHANNEL AND ALL OTHER WATER BODIES. CONDUCT ONGOING MONITORING AND REPAIR (AS NEEDED) OF SEDIMENT BARRIERS DURING PROJECT IMPLEMENTATION.
15. DURING POST-PROJECT SEDIMENT BARRIER REMOVAL, REMOVE OR PERMANENTLY STABILIZE SEDIMENT TRAPPED BY SEDIMENT BARRIERS.
16. ALL EXPOSED SOILS WILL BE STABILIZED ONCE CONSTRUCTION IS COMPLETED. SOILS WILL BE STABILIZED USING VARIOUS TECHNIQUES AS DESCRIBED IN THIS PLAN INCLUDING, SEEDING, SOD TRANSPLANT AND PLANTING.
17. THE CONTRACTOR SHALL BE RESPONSIBLE FOR SAVING AND PROTECTING ALL EXISTING TREES AND VEGETATION WHERE REMOVAL FOR CONSTRUCTION IS NOT MANDATORY.
18. IF WOUNDING OF SAVED TREES OCCUR, A NON-TOXIC WOUND DRESSING MUST BE APPLIED IMMEDIATELY. EXCAVATORS MUST HAVE A NON-TOXIC TREE WOUND DRESSING WITH THEM ON CONSTRUCTION SITES.
19. ALL REMOVED ITEMS SHALL BECOME THE CONTRACTOR'S PROPERTY TO BE DISPOSED OF IN AN APPROVED MANNER IN ACCORDANCE WITH REGULATION BY THE OWNER AT NO ADDITIONAL EXPENSE TO THE OWNER, UNLESS SPECIFIED WITHIN THE PLANS. NO CONCRETE, RUBBLE, OR EXTRA MATERIALS SHALL BE BACKFILLED ON SITE.
20. MATERIAL STOCK PILE AREAS, ACCESS ROUTES, AND EQUIPMENT STORAGE AREAS WILL BE DISCUSSED AND APPROVED DURING THE PRECONSTRUCTION MEETING.
21. MATERIALS STORED ON THE SITE WHICH MIGHT CONTRIBUTE POLLUTANTS TO RUNOFF SHALL BE LOCATED IN AN ENCLOSED, COVERED, AND LOCKABLE CONTAINER. THESE MATERIALS ARE EXPECTED TO CONSIST MAINLY OF FERTILIZERS, FUELS, AND MACHINERY LUBRICANTS.
22. ALL EXISTING AND PROPOSED CONTOURS ARE LABELED IN FEET. ALL SLOPES ARE SHOWN AS DIAGRAMMATIC AND SHALL BE ROUNDED AT THE TOP AND BOTTOM.
23. THE CONTRACTOR SHALL BE RESPONSIBLE FOR THE CLEANUP OF THE PROJECT SITE AND SURROUNDING AREAS ON A DAILY BASIS OF ANY TRASH OR MUD ON THE SITE AS A RESULT OF CONSTRUCTION.
24. THE CONTRACTOR SHALL RESTORE ALL STAGING AND STOCKPILING AREAS TO THEIR ORIGINAL CONDITION OR BETTER THAN EXISTING UPON COMPLETION OF THE PROJECT. THE COST TO RESTORE THESE AREAS SHALL NOT BE MEASURED AND PAID FOR SEPARATELY BUT SHALL BE INCLUDED IN THE COST OF THE WORK.
25. THE CONTRACTOR SHALL MAINTAIN ALL HAUL ROUTES AND RESTORE THEM TO THEIR ORIGINAL CONDITION OR BETTER THAN EXISTING UPON COMPLETION OF USE AT NO EXPENSE TO THE OWNER.
26. ALL PAVED HAUL ROUTES SHALL BE MAINTAINED FREE OF MUD AND DEBRIS RESULTING FROM CONSTRUCTION OPERATIONS.
27. CONTRACTOR IS RESPONSIBLE FOR REPAIRING/REPLACING ALL DAMAGED INFRASTRUCTURE.
28. THE CONTRACTOR SHALL NOT DEVIATE FROM THE PLANS WITHOUT FIRST OBTAINING WRITTEN APPROVAL FROM ENGINEER. THE CONTRACTOR SHALL CONTACT THE ENGINEER IMMEDIATELY UPON DISCOVERY OF ANY ERRORS OR INCONSISTENCIES.
29. ALL ESTIMATES OF QUANTITIES SHALL BE VERIFIED BY THE CONTRACTOR/SUBCONTRACTOR, WHO SHALL BE RESPONSIBLE FOR DETERMINING ALL QUANTITIES AND PROVIDING THE WORK AND MATERIALS AS SHOWN ON THE PLANS. QUANTITY ESTIMATES ARE PROVIDED FOR GUIDANCE PURPOSES ONLY, AND SHOULD NOT BE USED AS A BASIS FOR PRICING.
30. DEWATERING ACTIVITIES MAY BE REQUIRED FOR CONSTRUCTION. CONTRACTOR IS RESPONSIBLE FOR OBTAINING A UNITED STATES ARMY CORPS OF ENGINEERS NATIONWIDE PERMIT 33 TEMPORARY CONSTRUCTION, ACCESS AND DEWATERING PERMIT, ALONG WITH ANY OTHER RELEVANT PERMITS REQUIRED FOR CONSTRUCTION DEWATERING.
31. ALL FLOW RATES REFERENCED IN THE DRAWINGS ARE RELATIVE TO USGS GAGE 12340500 CLARK FORK ABOVE MISSOULA, MT AND DO NOT EQUAL ACTUAL FLOWS AT THE PROJECT SITE UNDER THOSE CONDITIONS.

GENERAL LEGEND

ITEM	EXISTING	PROPOSED
RIGHT OF WAY LINE		
PROPERTY LINE		
WATERLINE	W	W
METERED		
WATER SERVICE		
FIRE HYDRANT		
VALVE		
SANITARY SEWER	SS	SS
SEWER MANHOLE	S	S
STORM SEWER	SD	SD
STORM SEWER MANHOLE	D	D
OVERHEAD POWER	OH	OH
GAS LINE	G	G
DROP INLET		
CURB AND GUTTER		
HEADER CURB		
GRADING LIMITS		
MAJOR CONTOUR		4985
MINOR CONTOUR		
EXISTING MAJOR CONTOUR	4985	
EXISTING MINOR CONTOUR		
MATCHLINE		
SLOPE ARROW	-51.2%	-1.5%
SWALE		
HIGH POINT		

SITE LEGEND

ITEM	EXISTING	PROPOSED
ASPHALT PAVING		
GRAVEL TRAIL		
ASPHALT REMOVAL		
RIPRAP		
PLANTING REGION		
VEGETATED RIPRAP		

DESIGNED SRK
DRAWN SRK
CHECKED MAR
DATE 05/2024

REVISION

RESPEC
WATER & NATURAL RESOURCES
3810 VALLEY COMMONS DR SUITE 4
BOZEMAN, MT 59718
WWW.RESPEC.COM PHONE: (406)284-2525

STAMP
90% REVIEW
PRELIMINARY
NOT FOR CONSTRUCTION
5/2024

811 Know what's below. Call before you dig.

CITY OF MISSOULA
PARKS AND RECREATION DEPARTMENT
600 CREGG LANE
MISSOULA, MT 59801

CLARK FORK RIVER RESTORATION AND ACCESS - BEARTRACKS BRIDGE

GENERAL NOTES ABBREVIATIONS AND LEGEND

SHEET NUMBER:
G-03
SHEET

NAME: N:\PROJECTS\W0020.21001 - CFR RESTORATION & ACCESS\CAD\SHEETS\ACCESS DESIGN\BEARTRACKS SHEET SET\CFR R&A_BEARTRACKS_S_GENERAL.DWG
PLOT DATE: May 15, 2024 10:03 AM, BY: SANDRA (SANDY) KOHL

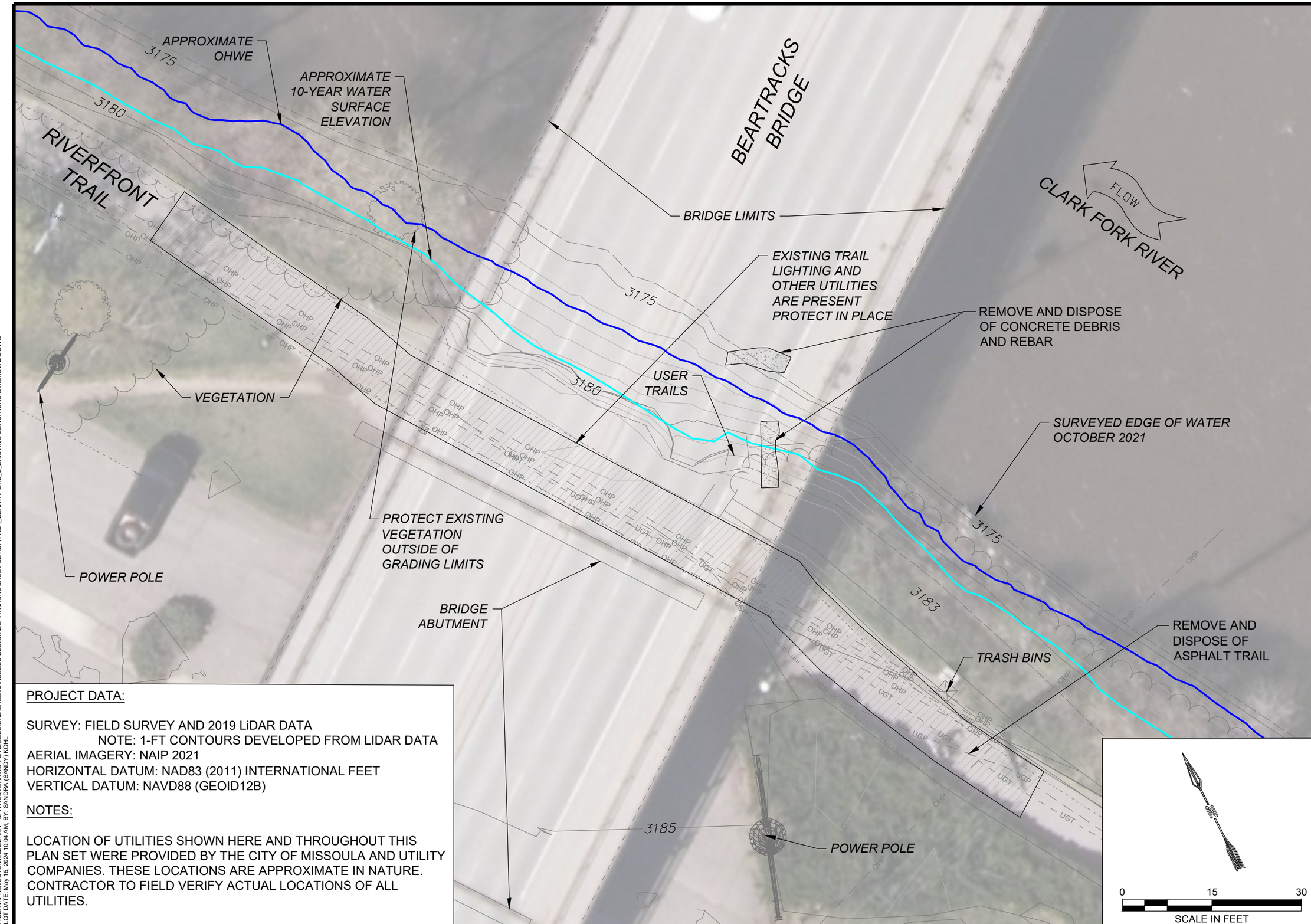

PROJECT DATA:

SURVEY: FIELD SURVEY AND 2019 LiDAR DATA
NOTE: 1-FT CONTOURS DEVELOPED FROM LIDAR DATA
AERIAL IMAGERY: NAIP 2021
HORIZONTAL DATUM: NAD83 (2011) INTERNATIONAL FEET
VERTICAL DATUM: NAVD88 (GEOID12B)

NOTES:

LOCATION OF UTILITIES SHOWN HERE AND THROUGHOUT THIS PLAN SET WERE PROVIDED BY THE CITY OF MISSOULA AND UTILITY COMPANIES. THESE LOCATIONS ARE APPROXIMATE IN NATURE. CONTRACTOR TO FIELD VERIFY ACTUAL LOCATIONS OF ALL UTILITIES.

NAME: N:\PROJECTS\W0020.21001 - CFR RESTORATION & ACCESS\CAD\SHEETS\ACCESS DESIGN\BEARTRACKS SHEET SET\CFR R&A_BEARTRACKS_S_EXISTING CONDITIONS & REMOVALS.DWG
PLOT DATE: May 15, 2024 10:04 AM, BY: SANDRA (SANDY) KOHL

DESIGNED	SRK
DRAWN	SRK
CHECKED	MAR
DATE	05/2024

REVISION

RESPEC
WATER & NATURAL RESOURCES
3810 VALLEY COMMONS DR SUITE 4
BOZEMAN, MT 59718
WWW.RESPEC.COM PHONE (406)284-2525

STAMP
90% REVIEW
PRELIMINARY
NOT FOR CONSTRUCTION
5/2024

811
Know what's below. Call before you dig.

CITY OF MISSOULA
PARKS AND RECREATION DEPARTMENT
600 CREGG LANE
MISSOULA, MT 59801

CLARK FORK RIVER RESTORATION AND ACCESS - BEARTRACKS BRIDGE

EXISTING CONDITIONS & REMOVALS

SHEET NUMBER:
EX-01
SHEET

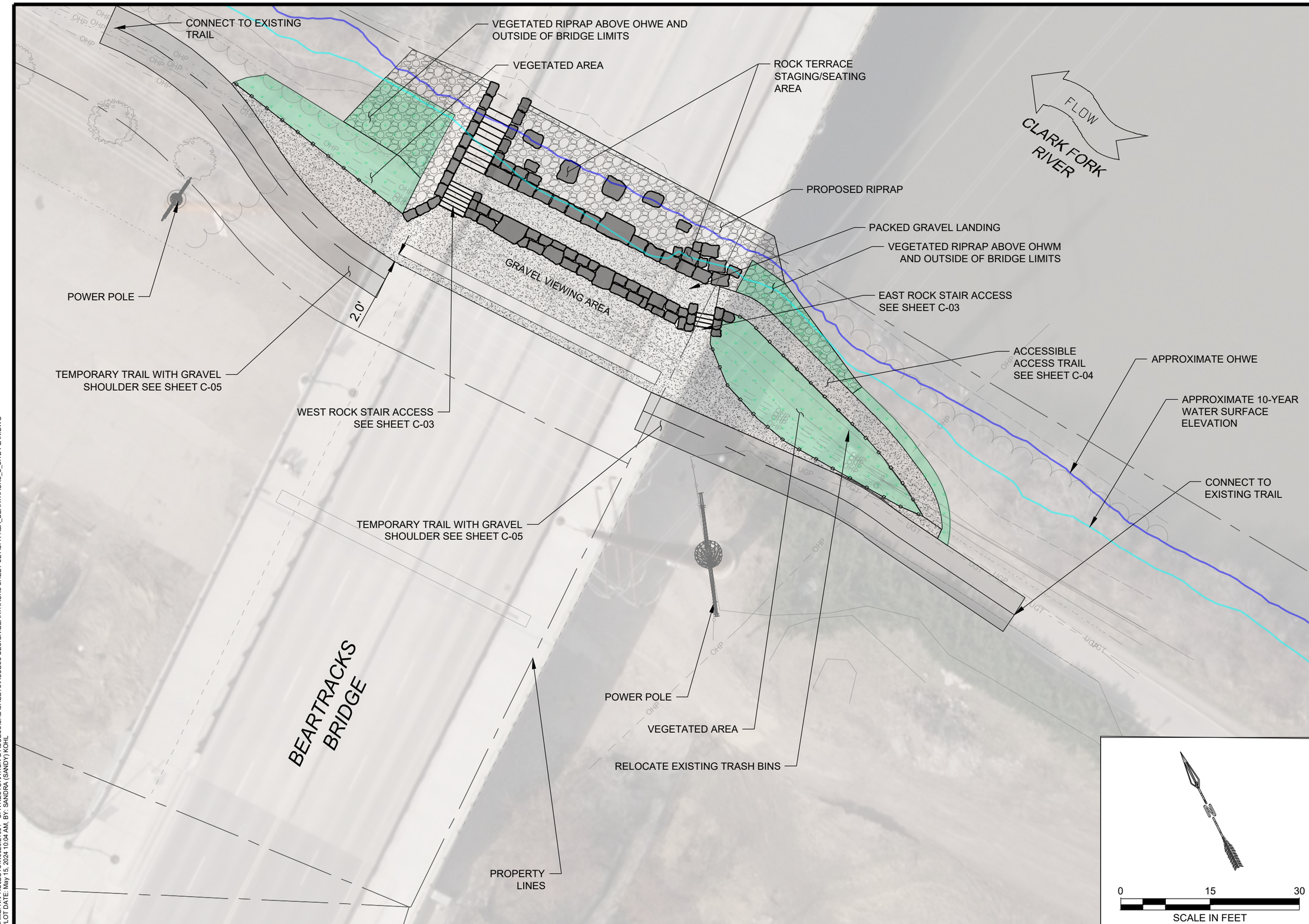

NAME: N:\PROJECTS\W0020.21001 - CFR RESTORATION & ACCESS\CAD\SHEETS\ACCESS DESIGN\BEARTRACKS SHEET SET\CFR R&A_BEARTRACKS_S_SITE PLAN.DWG
PLOT DATE: May 15, 2024 10:04 AM, BY: SANDRA (SANDY) KOHL

DESIGNED SRK
DRAWN SRK
CHECKED MAR
DATE 05/2024

REVISION

RESPEC
WATER & NATURAL RESOURCES
3810 VALLEY COMMONS DR SUITE 4
BOZEMAN, MT 59718
WWW.RESPEC.COM PHONE (406)284-2525

STAMP
90% REVIEW
PRELIMINARY
NOT FOR CONSTRUCTION
5/2024

811
Know what's below. Call before you dig.

CITY OF MISSOULA
PARKS AND RECREATION
DEPARTMENT
600 CREGG LANE
MISSOULA, MT 59801

CLARK FORK RIVER
RESTORATION AND
ACCESS -
BEARTRACKS BRIDGE

SITE PLAN

SHEET NUMBER:
C-01
SHEET

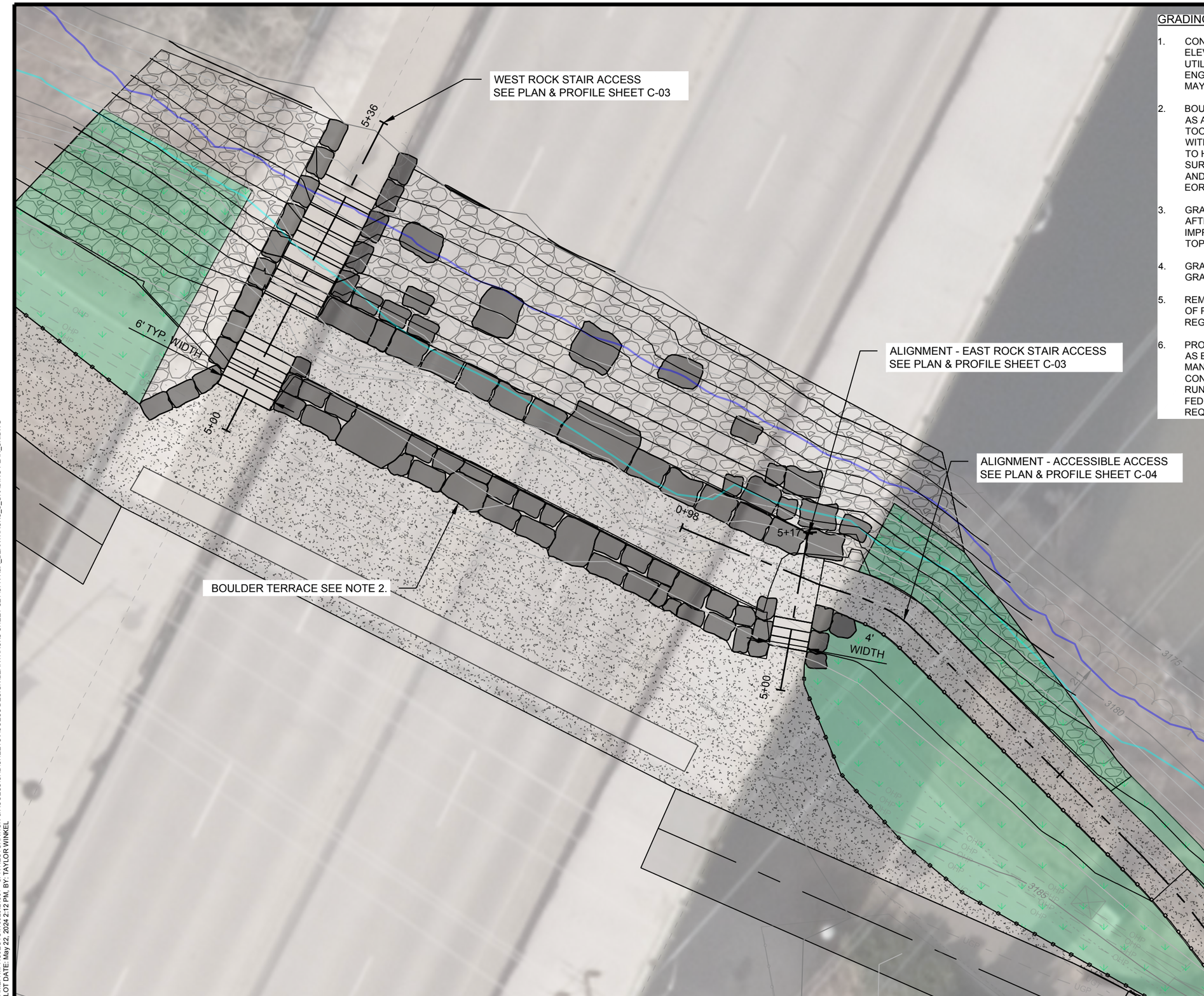

GRADING NOTES

1. CONTRACTOR TO FIELD VERIFY LOCATION AND ELEVATION OF ALL EXISTING DRY AND WET UTILITIES PRIOR TO CONSTRUCTION AND NOTIFY ENGINEER OF ANY ISSUES. UTILITY RELOCATION MAY BE REQUIRED.
2. BOULDER ELEVATIONS AND SIZES ARE SHOWN AS APPROXIMATE. TOP OF BOULDER ELEVATIONS TOO VARY ± 4" FROM ADJACENT BOULDERS WITHIN THE SAME HORIZONTAL ROW. BOULDERS TO HAVE NATURAL (NOT PERFECTLY FLAT) SURFACE AND WILL VARY IN SIZE. ELEVATION AND PLACEMENTS WILL BE DIRECTED BY CITY OR EOR.
3. GRADES SHOWN ARE FINAL SURFACE GRADES AFTER COMPLETION OF SURFACE IMPROVEMENTS AND PLACEMENT OF RIPRAP AND TOPSOIL.
4. GRADE AREAS AT SITE PERIMETER TO MATCH GRADES OF ADJACENT PARCELS.
5. REMOVE EXCESS SOIL FROM SITE AND DISPOSE OF PROPERLY IN ACCORDANCE WITH APPLICABLE REGULATIONS.
6. PROVIDE TEMPORARY GRADING FEATURES SUCH AS BERMS, SWALES, SUMPS AND BASINS TO MANAGE INTERIM STORM WATER RUNOFF DURING CONSTRUCTION PROCESS. STORM WATER RUNOFF LEAVING THE SITE SHALL MEET ALL FEDERAL, STATE AND LOCAL QUALITY REQUIREMENTS.

0 15 30
SCALE IN FEET

DESIGNED SRK
DRAWN SRK
CHECKED MAR
DATE 05/2024

REVISION

RESPEC
WATER & NATURAL RESOURCES
3810 VALLEY COMMONS DR SUITE 4
BOZEMAN, MT 59718
WWW.RESPEC.COM PHONE: (406)284-2525

STAMP
90% REVIEW
PRELIMINARY
NOT FOR CONSTRUCTION
5/2024

811
Know what's below.
Call before you dig.

CITY OF MISSOULA
PARKS AND RECREATION
DEPARTMENT
600 CREGG LANE
MISSOULA, MT 59801

CLARK FORK RIVER
RESTORATION AND
ACCESS -
BEARTRACKS BRIDGE

GRADING PLAN

SHEET NUMBER:
C-02
SHEET

NAME: N:\PROJECTS\W0020.21001 - CFR RESTORATION & ACCESS\CAD\SHEETS\ACCESS DESIGN\BEARTRACKS SHEET SET\CFR R&A_BEARTRACKS_S_GRADING PLAN_SK.DWG
PLOT DATE: May 22, 2024 2:12 PM, BY: TAYLOR WINKEL

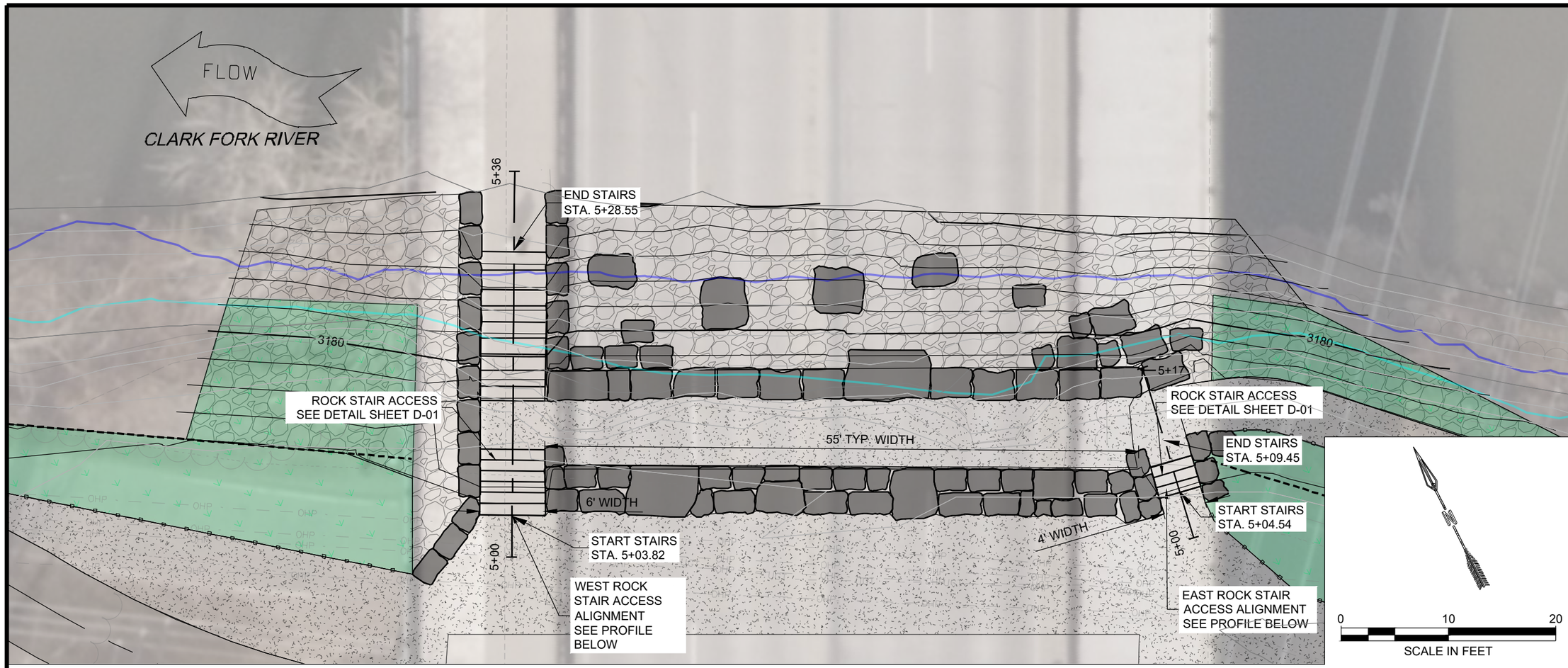

PROFILE VIEW -WEST ROCK STAIR ACCESS
HORIZ. SCALE: 1" = 10'
VERT. SCALE: 1"= 10'

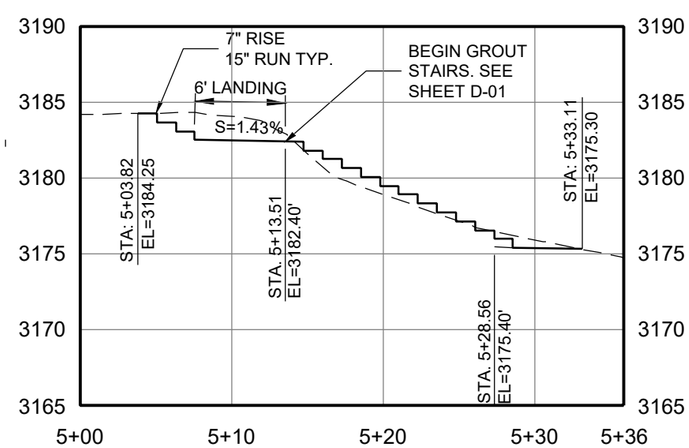

PROFILE VIEW -EAST ROCK STAIR ACCESS
HORIZ. SCALE: 1" = 10'
VERT. SCALE: 1"= 10'

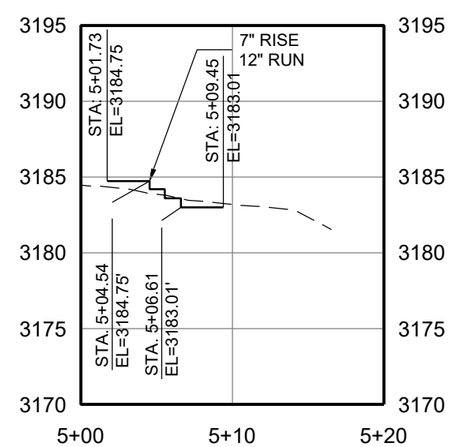

PROPOSED GROUND
EXISTING GROUND

DESIGNED SRK
DRAWN SRK
CHECKED MAR
DATE 05/2024

REVISION

RESPEC
WATER & NATURAL RESOURCES
3810 VALLEY COMMONS DR SUITE 4
BOZEMAN, MT 59718
WWW.RESPEC.COM PHONE (406)284-2525

STAMP
90% REVIEW
PRELIMINARY
NOT FOR CONSTRUCTION
5/2024

811
Know what's below.
Call before you dig.

CITY OF MISSOULA
PARKS AND RECREATION
DEPARTMENT
600 CREGG LANE
MISSOULA, MT 59801

CLARK FORK RIVER
RESTORATION AND
ACCESS -
BEARTRACKS BRIDGE

ACCESS PLAN &
PROFILE

SHEET NUMBER:
C-03
SHEET

NAME: N:\PROJECTS\W0020.21001 - CFR RESTORATION & ACCESS\CAD\SHEETS\ACCESS DESIGN\BEARTRACKS SHEET SET\CFR R&A_BEARTRACKS_S_PROFILES.DWG
PLOT DATE: May 15, 2024 10:06 AM, BY: SANDRA (SANDY) KOHL

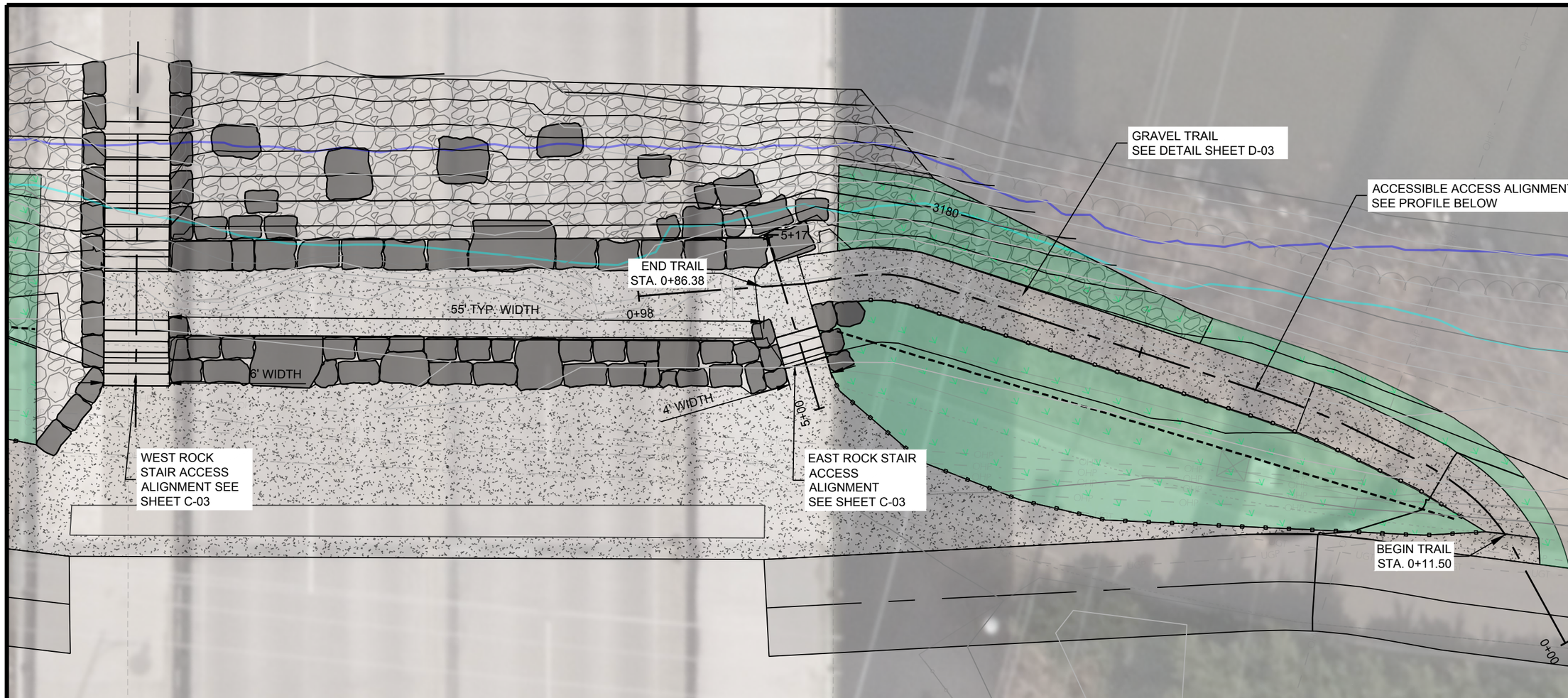

PROFILE VIEW - ACCESSIBLE ACCESS
HORIZ. SCALE: 1" = 10'
VERT. SCALE: 1" = 10"

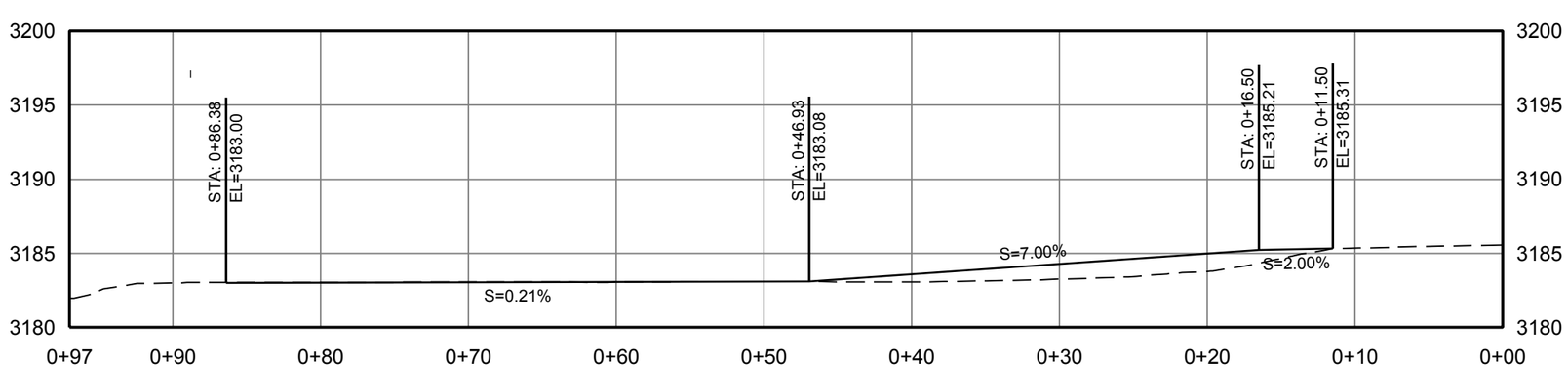

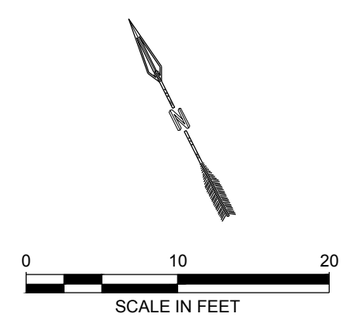

PROPOSED GROUND ———
EXISTING GROUND — — — —

DESIGNED SRK
DRAWN SRK
CHECKED MAR
DATE 05/2024

REVISION

RESPEC
WATER & NATURAL RESOURCES
3810 VALLEY COMMONS DR SUITE 4
BOZEMAN, MT 59718
WWW.RESPEC.COM PHONE: (406)284-2525

STAMP
90% REVIEW
PRELIMINARY
NOT FOR CONSTRUCTION
5/2024

811
Know what's below.
Call before you dig.

CITY OF MISSOULA
PARKS AND RECREATION
DEPARTMENT
600 CREGG LANE
MISSOULA, MT 59801

CLARK FORK RIVER
RESTORATION AND
ACCESS -
BEARTRACKS BRIDGE

ACCESS PLAN &
PROFILE

SHEET NUMBER:
C-04
SHEET

NAME: N:\PROJECTS\W0020.21001 - CFR RESTORATION & ACCESS\CAD\SHEETS\ACCESS DESIGN\BEARTRACKS SHEET SET\CFR R&A_BEARTRACKS_S_PROFILES - ACCESSIBLE ACCESS.DWG
PLOT DATE: May 22, 2024 2:08 PM, BY: TAYLOR WINKEL

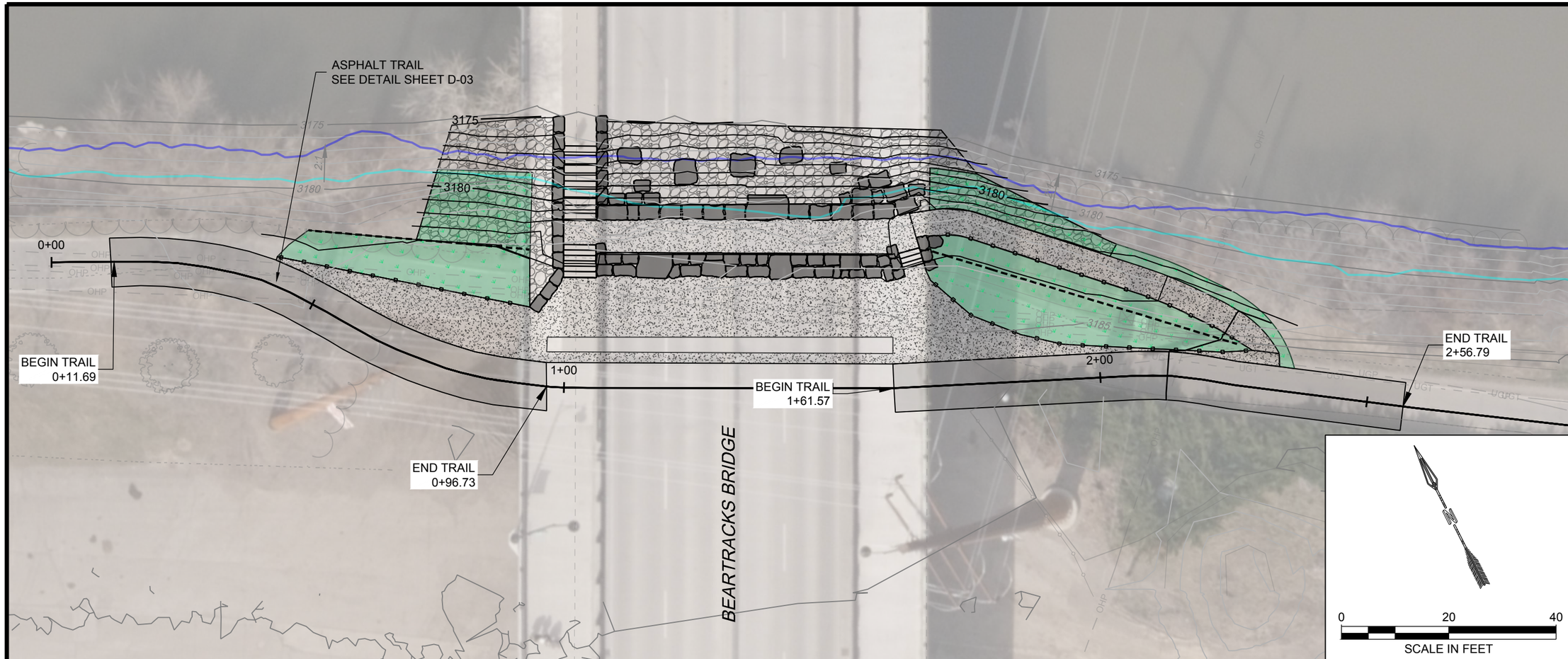

PROFILE VIEW-TRAIL REALIGNMENT
HORIZ. SCALE: 1" = 20'
VERT. SCALE: 1" = 10'

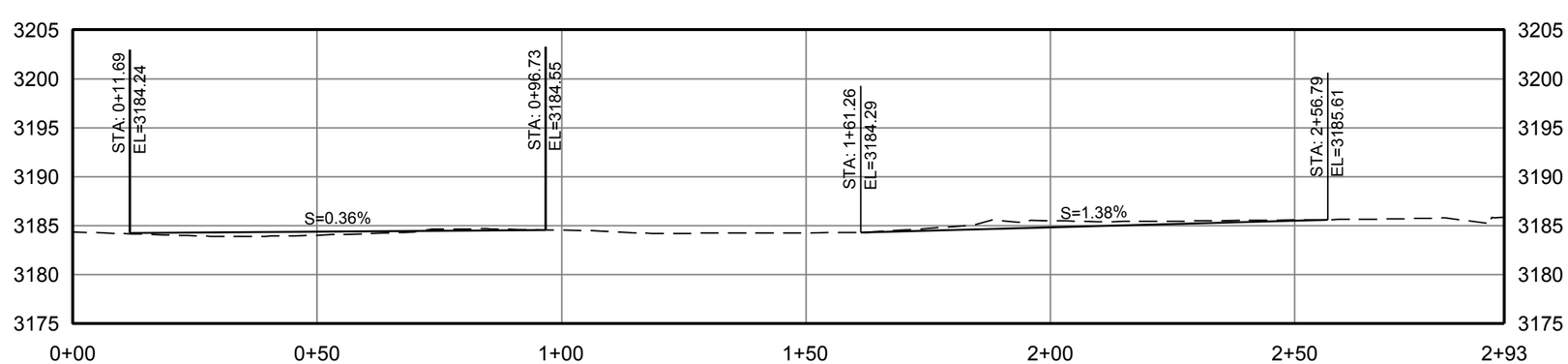

PROPOSED GROUND ————
EXISTING GROUND — — — — —

DESIGNED SRK
DRAWN SRK
CHECKED MAR
DATE 05/2024

REVISION

RESPEC
WATER & NATURAL RESOURCES
3810 VALLEY COMMONS DR SUITE 4
BOZEMAN, MT 59718
WWW.RESPEC.COM PHONE: (406)284-2525

STAMP
90% REVIEW
PRELIMINARY
NOT FOR CONSTRUCTION
5/2024

811
Know what's below.
Call before you dig.

CITY OF MISSOULA
PARKS AND RECREATION
DEPARTMENT
600 CREGG LANE
MISSOULA, MT 59801

CLARK FORK RIVER
RESTORATION AND
ACCESS -
BEARTRACKS BRIDGE

TRAIL REALIGNMENT
PLAN & PROFILE

SHEET NUMBER:
C-05
SHEET

NAME: N:\PROJECTS\W0020.21001 - CFR RESTORATION & ACCESS\CAD\SHEETS\ACCESS DESIGN\BEARTRACKS SHEET SET\CFR R&A_BEARTRACKS_S_TRAIL PROFILE.DWG
PLOT DATE: May 22, 2024 2:10 PM, BY: TAYLOR WINKEL

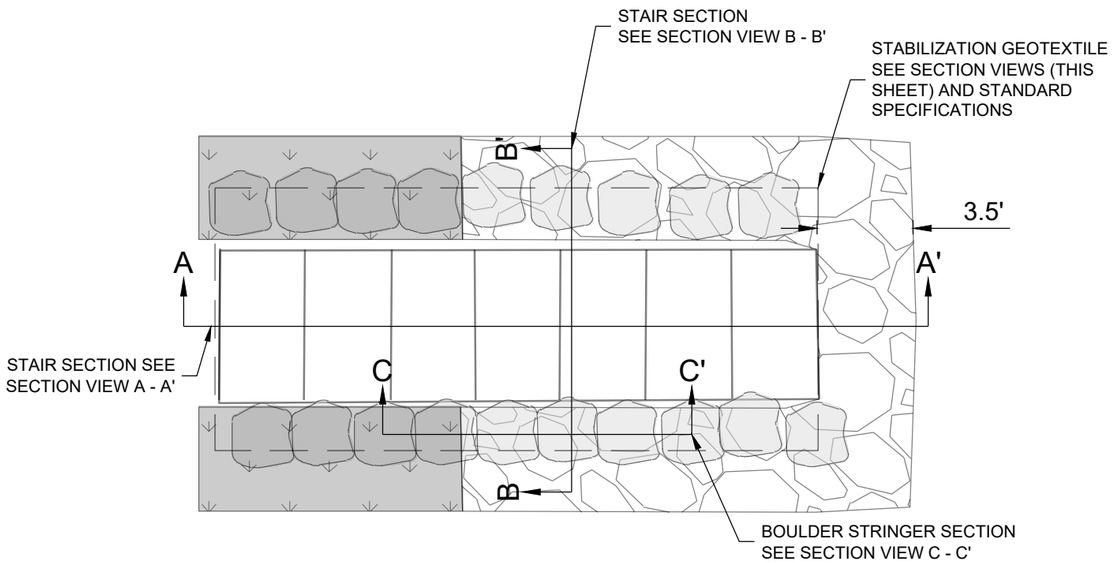

ROCK STAIR ACCESS DETAIL - PLAN VIEW

NOT TO SCALE

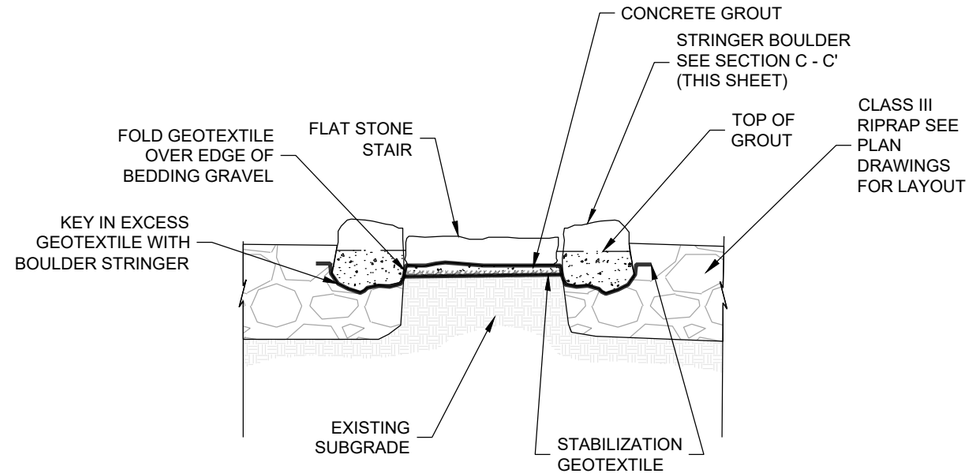

ROCK STAIR ACCESS DETAIL - SECTION B - B'

NOT TO SCALE

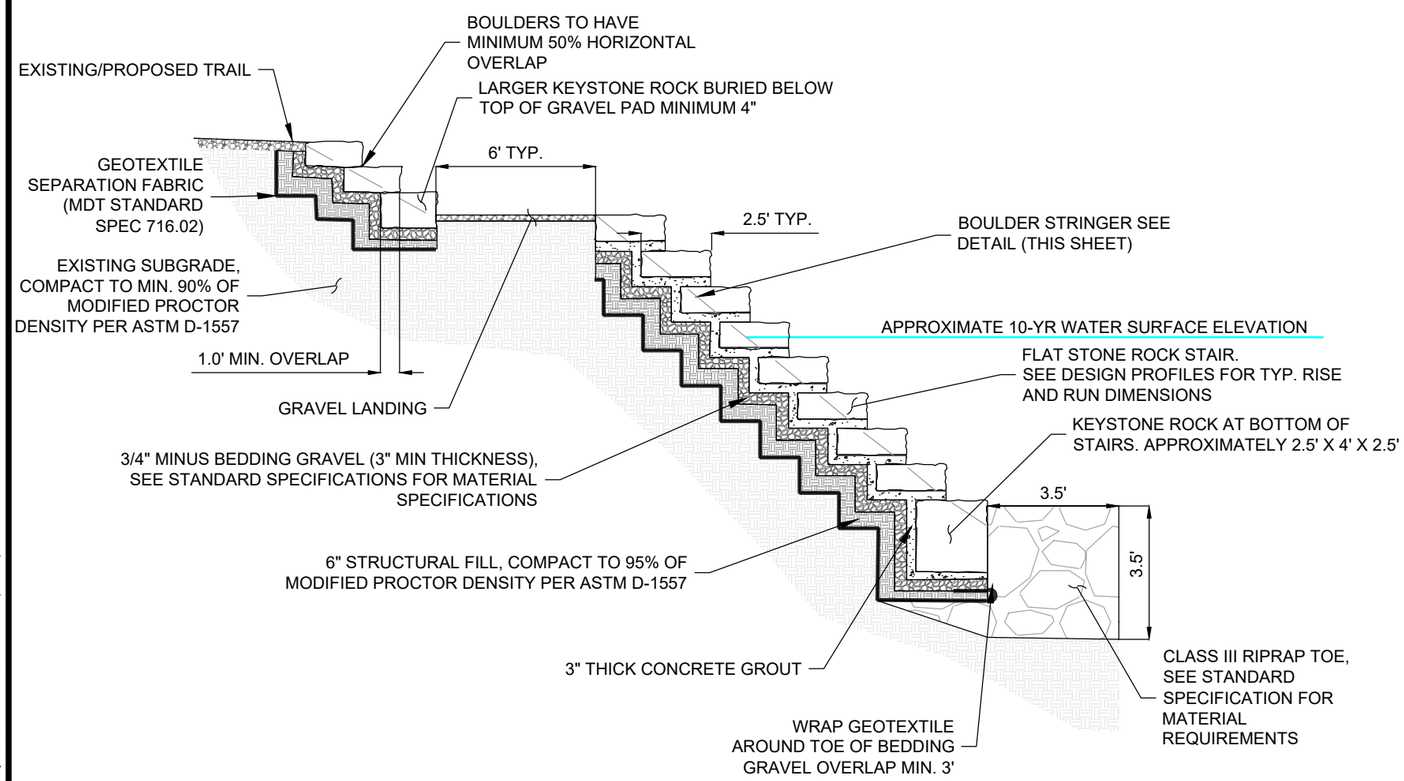

ROCK STAIRS - TYPICAL SECTION

NOT TO SCALE

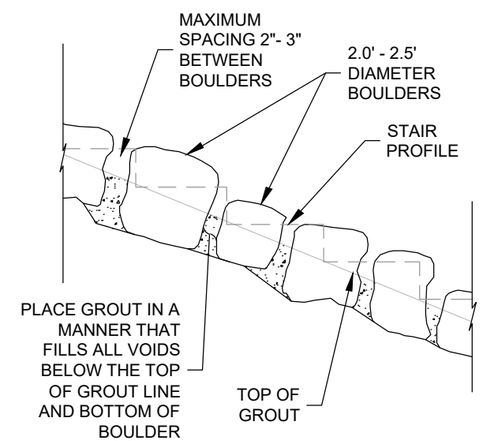

BOULDER STRINGER - TYPICAL SECTION

NOT TO SCALE

NOTES

1. STONE DIMENSIONS ARE SUBJECT TO SUPPLIER AVAILABILITY. CONTRACTOR WILL COORDINATE WITH ENGINEER OR PARKS PROJECT MANAGER ON STONE SELECTION AND PLACEMENT IN ACCORDANCE WITH PROPOSED ROCK SPECIFICATIONS.
2. SURFACES ADJACENT TO THE "BOULDER STRINGER" WILL BE GRADED TO CREATE A SMOOTH TRANSITION UPSTREAM AND DOWNSTREAM OF STAIR ACCESSES.
3. PRIOR TO PLACEMENT OF FILL AND/OR GRAVEL SECTION MATERIALS, THE EXPOSED SUBGRADE SOILS WILL BE COMPACTED TO VERIFY THAT STABLE SUBGRADE CONDITIONS EXIST. ANY LOOSE, SOFT, DISTURBED, OR OTHERWISE UNSUITABLE MATERIALS WILL BE OVEREXCAVATED AND REPLACED WITH STRUCTURAL FILL.
4. CONCRETE GROUT TO MEET MDT STANDARD SPEC 713.04.

DESIGNED	SRK
DRAWN	SRK
CHECKED	MAR
DATE	05/2024

REVISION

RESPEC
WATER & NATURAL RESOURCES
3810 VALLEY COMMONS DR SUITE 4
BOZEMAN, MT 59715
WWW.RESPEC.COM PHONE:(406)284-2525

STAMP
90% REVIEW
PRELIMINARY
NOT FOR CONSTRUCTION
5/2024

811
Know what's below.
Call before you dig.

CITY OF MISSOULA
PARKS AND RECREATION
DEPARTMENT
600 CREGG LANE
MISSOULA, MT 59801

CLARK FORK RIVER
RESTORATION AND
ACCESS -
BEARTRACKS BRIDGE

DETAILS

SHEET NUMBER:
D-01
SHEET

NAME: N:\PROJECTS\W0020.21001 - CFR RESTORATION & ACCESS\CAD\SHEETS\ACCESS DESIGN\BEARTRACKS SHEET SET\CFR R&A_BEARTRACKS_S_DETAILS.DWG
PLOT DATE: May 15, 2024 10:07 AM, BY: SANDRA (SANDY) KOHL

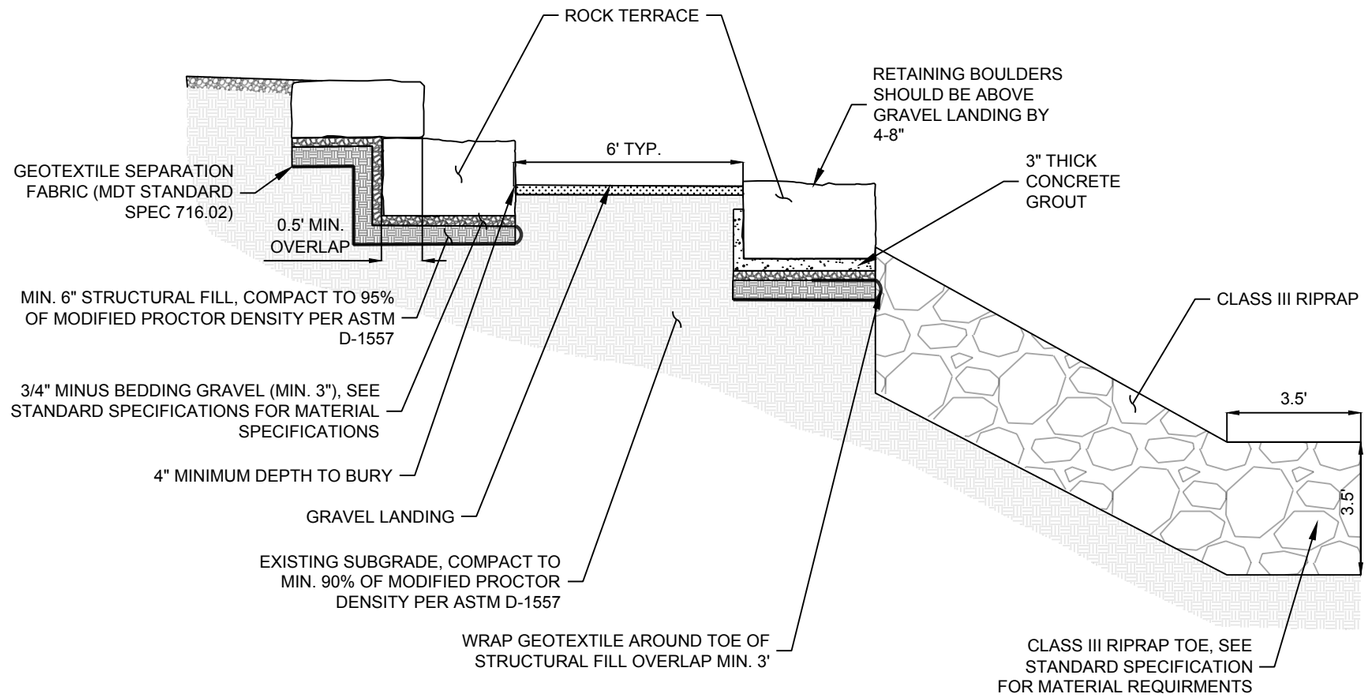

ROCK TERRACE - TYPICAL SECTION

NOT TO SCALE

NOTES

1. STONE DIMENSIONS ARE SUBJECT TO SUPPLIER AVAILABILITY. CONTRACTOR WILL COORDINATE WITH ENGINEER OR PARKS PROJECT MANAGER ON STONE SELECTION AND PLACEMENT IN ACCORDANCE WITH PROPOSED ROCK SPECIFICATIONS.
2. SURFACES ADJACENT TO THE "BOULDER STRINGER" WILL BE GRADED TO CREATE A SMOOTH TRANSITION UPSTREAM AND DOWNSTREAM OF STAIR ACCESSES.
3. PRIOR TO PLACEMENT OF FILL AND/OR GRAVEL SECTION MATERIALS, THE EXPOSED SUBGRADE SOILS WILL BE COMPACTED TO VERIFY THAT STABLE SUBGRADE CONDITIONS EXIST. ANY LOOSE, SOFT, DISTURBED, OR OTHERWISE UNSUITABLE MATERIALS WILL BE OVEREXCAVATED AND REPLACED WITH STRUCTURAL FILL.
4. CONCRETE GROUT TO MEET MDT STANDARD SPEC 713.04.

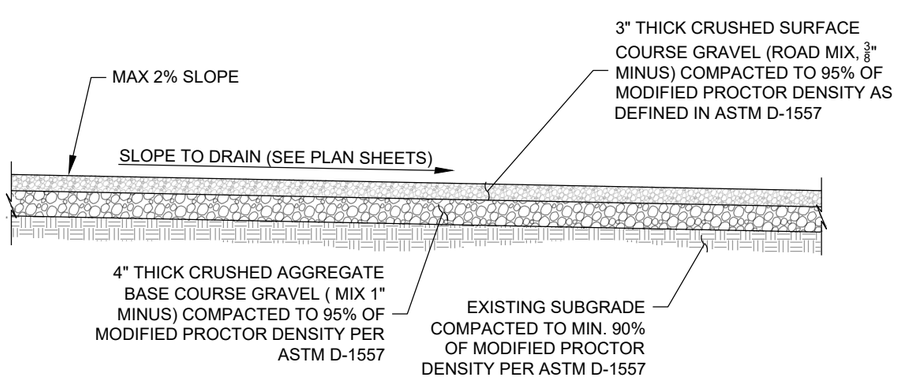

GRAVEL LANDING AREA - TYPICAL SECTION

NOT TO SCALE

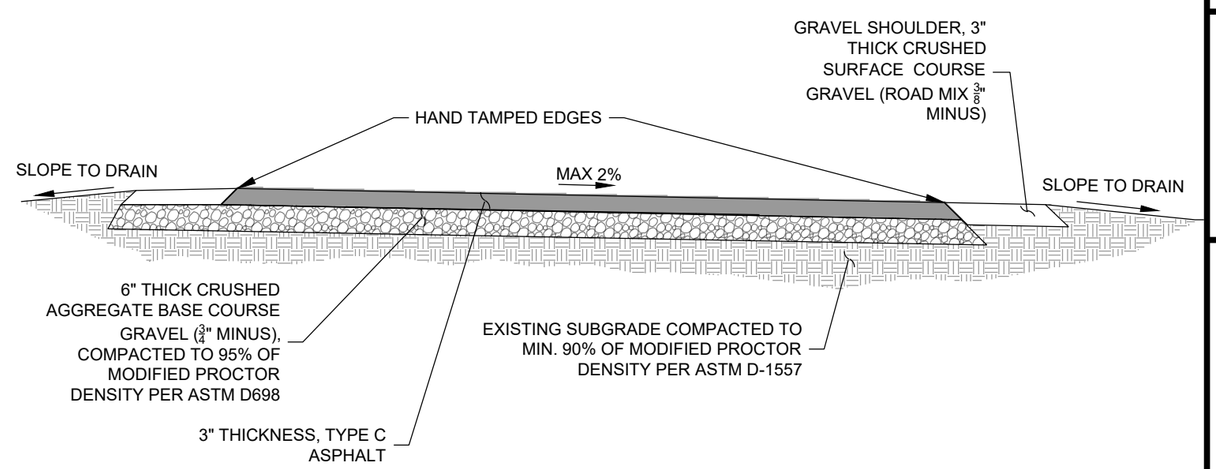

TEMPORARY ASPHALT TRAIL - TYPICAL SECTION

NOT TO SCALE

DESIGNED SRK
DRAWN SRK
CHECKED MAR
DATE 05/2024

REVISION

RESPEC
WATER & NATURAL RESOURCES
3810 VALLEY COMMONS DR SUITE 4
BOZEMAN, MT 59718
WWW.RESPEC.COM PHONE: (406)284-2525

STAMP
90% REVIEW
PRELIMINARY
NOT FOR CONSTRUCTION
5/2024

811 Know what's below. Call before you dig.

CITY OF MISSOULA
PARKS AND RECREATION DEPARTMENT
600 CREGG LANE
MISSOULA, MT 59801

CLARK FORK RIVER RESTORATION AND ACCESS - BEARTRACKS BRIDGE

DETAILS

SHEET NUMBER:
D-02
SHEET

NAME: N:\PROJECTS\W0020.21001 - CFR RESTORATION & ACCESS\CAD\SHEETS\ACCESS DESIGN\BEARTRACKS SHEET SET\CFR R&A_BEARTRACKS_S_DETAILS.DWG
PLOT DATE: May 15, 2024 10:07 AM, BY: SANDRA (SANDY) KOHL

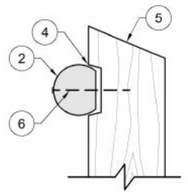

BEVEL DETAIL

1. 6" DIAMETER TREATED WOOD POST
2. SMOOTH 4" DIAMETER TREATED WOOD RAILS (OUTSIDE FENCE)
3. REFERENCE BEVEL DETAIL
4. 1" MORTISE
5. 22.5 DEGREE CHAMFER TO THE INSIDE OF FENCE FINISH CHAMFER WITH $\frac{1}{4}$" ROUNDED EDGE
6. EXTERIOR $\frac{5}{16}$ IN. X 6 IN. STAR DRIVE LAG SCREW OR APPROVAL EQUAL.
7. TOP OF TOP RAIL - 2" BELOW TOP OF POST

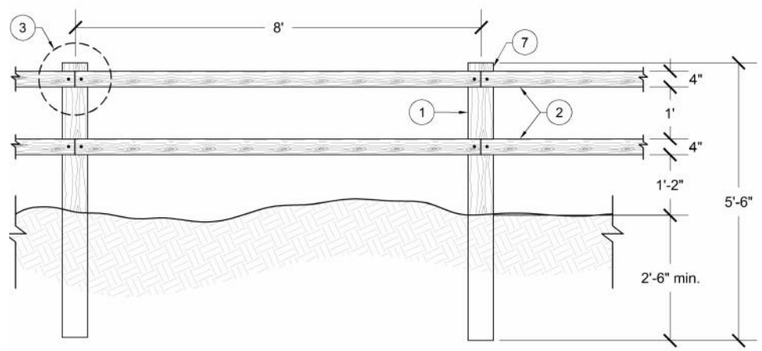

*WOODEN FENCE DETAIL - SECTION VIEW

NOT TO SCALE

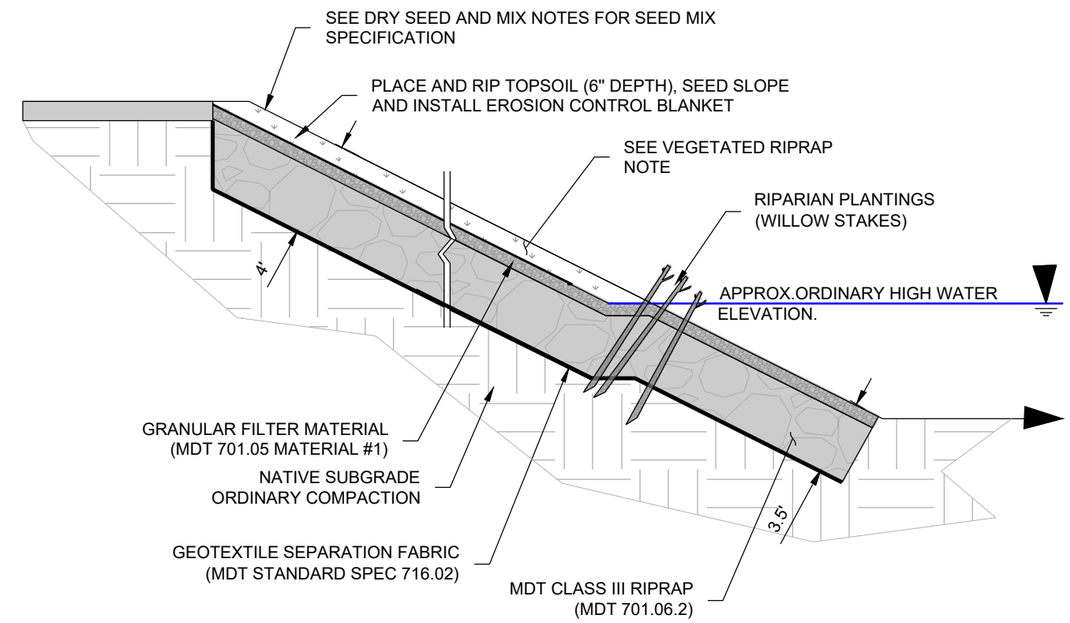

RIPRAP REVEGETATION DETAIL - SECTION VIEW

NOT TO SCALE

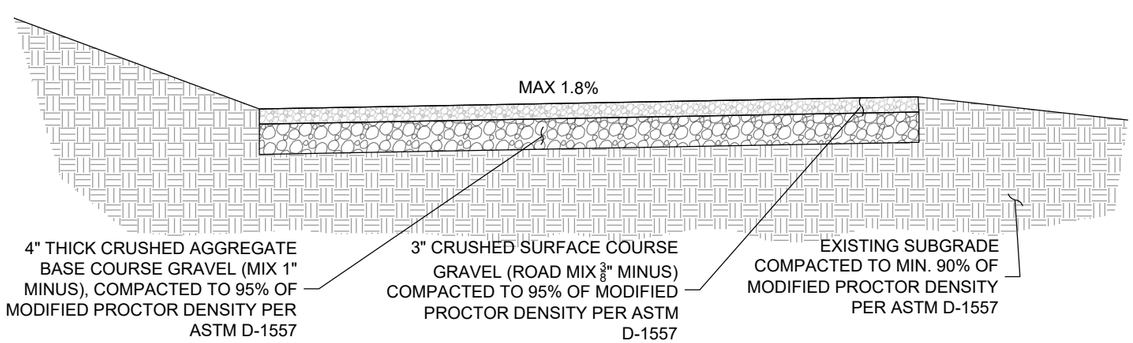

GRAVEL TRAIL DETAIL - SECTION VIEW

NOT TO SCALE

VEGETATED RIPRAP NOTE:

1. RIPRAP REVEGETATION: THIS WORK IS THE CONSTRUCTION REQUIREMENTS FOR REVEGETATION MATERIAL ON RIPRAP SURFACES ABOVE ORDINARY HIGH WATER MARK ELEVATION. CONSTRUCTION REQUIREMENTS ARE TO FILL THE SPACES AND VOIDS BETWEEN THE ROCKS WITH GRANULAR FILTER MATERIAL AND TOPSOIL FOLLOWING PLACEMENT OF RIPRAP, OR AT INTERVALS APPROPRIATE FOR THE SIZE AND CONFIGURATION OF THE INSTALLATION. ACCEPTABLE TOPSOIL INCLUDES LOCALLY OBTAINED TOPSOIL WITH LESS THAN 30% COARSE FRAGMENTS (>0.2 INCH) BY WEIGHT. CONTRACTOR TO PLACE A SUFFICIENT AMOUNT OF GRANULAR FILTER MATERIAL OVER THE RIPRAP, SO THAT AFTER SETTLING, THE LEVEL OF GRANULAR FILTER MATERIAL COMES TO THE VERY TOP OF THE ROCK. PLACE THE TOPSOIL TO A 4 TO 6-INCH DEPTH OVER THE GRANULAR FILTER MATERIAL. PLACE MATERIAL IN A MANNER THAT CREATES A SMOOTH, UNIFORM SURFACE FOR SEEDING AND PLACEMENT OF THE EROSION CONTROL BLANKET/MULCH. CONTRACTOR TO HAND BROADCAST SEED THE SOIL IMMEDIATELY AFTER PLACEMENT, REGARDLESS OF TIME OF YEAR, WITH THE SEED MIXTURE AND RATES SPECIFIED BY THE ENGINEER. SCARIFY THE SOIL IMMEDIATELY PRIOR TO AND FOLLOWING SEEDING TO INCORPORATE SEED TO A DEPTH OF ½ INCH INTO THE SOIL.

DRYLAND SEED MIX NOTES

1. ALL AREAS DISTURBED WITHIN CONSTRUCTION LIMITS, WHERE NOT SPECIFIED TO BE ANOTHER MATERIAL PER PLAN, SHALL BE RE-ESTABLISHED WITH DRYLAND SEED MIX, AS SPECIFIED.
2. PROVIDE DOCUMENTATION OF SEED ORIGIN AND PURITY TO CITY OR LANDSCAPE ARCHITECT PRIOR TO SEEDING.
3. SOW SEED MIXES ON DISTURBED AREAS AFTER ALL GRADING ACTIVITIES HAVE BEEN COMPLETED.
4. PREPARE SEED BED PRIOR TO SEEDING PER PLANS.
5. ACCEPTABLE SEEDING DATES ARE APRIL 15 - JUNE 20 IN THE SPRING, OR SEPTEMBER 20 - OCTOBER 20 IN THE FALL. WRITTEN PERMISSION MUST BE GRANTED BY THE LANDSCAPE ARCHITECT TO PERFORM SEEDING OPERATIONS ON ANY OTHER DATES OF THE YEAR.
6. USE BROADCAST SEEDING METHOD, RAKE SEED THOROUGHLY INTO TOP $\frac{1}{2}$" OF SEED BED WITH HARD RAKE. SEED MUST BE APPLIED AT THE SPECIFIED RATE.
7. DRYLAND GRASS MIX AND WILDFLOWER MIX TO BE SEEDED AT SPECIFIED RATES ACROSS ALL DISTURBED AREAS PER PLANS.
8. SEED ESTABLISHMENT PERIOD COMMENCES UPON FINAL ACCEPTANCE AND SHALL CONSIST OF THE FIRST GROWING SEASON, OR UNTIL A HEALTHY, WELL-ROOTED, VIABLE MEADOW HAS BEEN ESTABLISHED, FREE OF NOXIOUS WEEDS, AND BARE AREAS. CONTRACTOR TO REQUEST A FINAL INSPECTION BY LANDSCAPE ARCHITECT TO DETERMINE THE END OF THE SEED ESTABLISHMENT PERIOD.
9. MONITOR THE SITE DURING THIS PERIOD TO DETECT AREAS OF WEED COLONIZATION. TREAT ALL NOXIOUS WEEDS (AS CURRENTLY DEFINED BY DEPARTMENT OF AGRICULTURE) WITH HERBICIDE OR MANUAL REMOVAL AS SOON AS DETECTED.
10. AFTER INITIAL GERMINATION PREPARE AND RE-SEED ANY BARE SPOTS GREATER THAN 2 SQUARE FEET.
11. IF AREAS OF BARE GROUND PERSIST AFTER FIRST GROWING SEASON, RESEED PER PLAN.

DESIGNED	SRK
DRAWN	SRK
CHECKED	MAR
DATE	05/2024

REVISION

RESPEC
WATER & NATURAL RESOURCES
3810 VALLEY COMMONS DR SUITE 4
BOZEMAN, MT 59718
WWW.RESPEC.COM PHONE (406)284-2525

STAMP
90% REVIEW
PRELIMINARY
NOT FOR CONSTRUCTION
5/2024

811 Know what's below. Call before you dig.

CITY OF MISSOULA
PARKS AND RECREATION DEPARTMENT
600 CREGG LANE
MISSOULA, MT 59801

CLARK FORK RIVER RESTORATION AND ACCESS - BEARTRACKS BRIDGE

DETAILS

SHEET NUMBER:
D-03
SHEET

NAME: N:\PROJECTS\W0020.21001 - CFR RESTORATION & ACCESS\CAD\SHEETS\ACCESS DESIGN\BEARTRACKS SHEET SET\CFR R&A_BEARTRACKS_S_DETAILS.DWG
PLOT DATE: May 15, 2024 10:07 AM, BY: SANDRA (SANDY) KOHL